LADDER CLIMB SYSTEM
USER INSTRUCTIONS

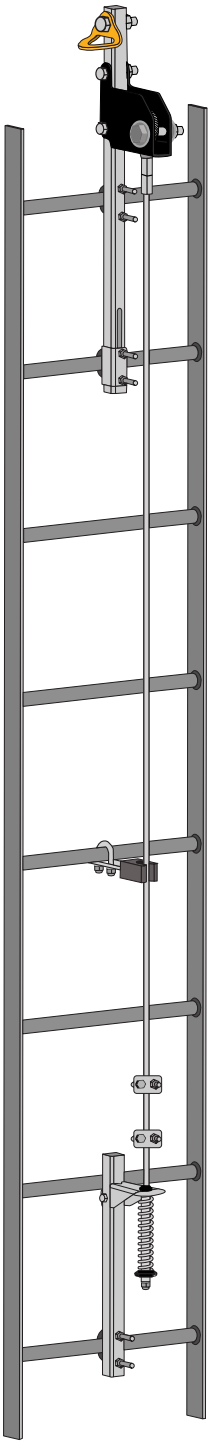

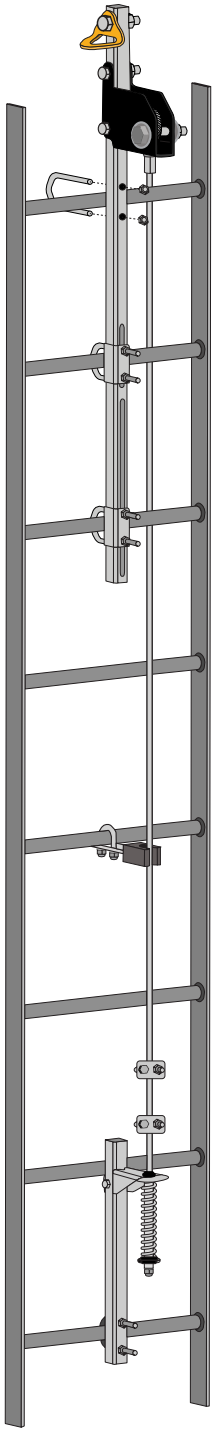

Compliant with ANSI A14.3
OSHA 1910.29, OSHA 1926.1053, OSHA 1926.502, OSHA 1910.140

V3.0 2023 Copyright Safewaze

WARNINGS AND IMPORTANT PRECAUTIONS

User must read, understand, and follow all safety and usage information contained within this manual prior to use of this equipment. Failure to follow all safety and usage information can result in serious injury or death.

These instructions shall be provided to the user. User must read, understand, and follow all safety and usage information contained within this manual prior to use of this equipment. Failure to follow these instructions or improper use can result in serious injury or death.

Intended Use:

The equipment covered in this manual is intended for use as part of a complete Personal Fall Arrest System (PFAS).

Use of this equipment for any other purpose, such as material handling, sports activities, or other action not described in these User Instructions is not approved by Safewaze. Use of this equipment in a manner outside the scope of those covered within this manual can result in serious injury or death.

The equipment covered in this manual is only to be used by trained personnel in workplace applications.

WARNING

Safewaze Ladder Climb Systems are part of a complete PFAS. Every user must be trained in the inspection, installation, operation, and proper usage of their complete PFAS. Unapproved or inappropriate use of Safewaze equipment could result in serious injury or death. Refer to these instructions for the proper selection, installation, maintenance, and service of this equipment. For questions regarding use of this equipment beyond the scope of this manual, contact Safewaze.

- **The warnings below are designed to reduce the risks associated with the use of Safewaze Ladder Climb Systems:**
  - DO NOT alter this equipment.
  - DO NOT attempt to shorten, extend, or modify the connection linkage length.
  - DO NOT use this equipment in any way not described in this manual.
  - Exposure of this equipment to chemicals, high heat, severe cold, or other harsh environments may produce a harmful effect. If in doubt of suitable conditions contact Safewaze.
  - Avoid use of this equipment around moving machinery and electrical hazards.
  - Avoid use of this equipment near sharp and abrasive surfaces.
  - Improper use of this equipment, not following instructions or markings may cause serious injury or death.
  - DO NOT use the Safewaze Ladder Climb System for work positioning. A separate work positioning system must be utilized.
  - Frequency of periodic inspection by a Competent Person other than the user should be established by the user's organization based upon careful consideration of relevant factors. Such factors include the nature and severity of workplace conditions affecting the equipment and the modes of use and exposure time of the equipment.

IMPORTANT

- **Users should enact the precautionary measures listed below to reduce the inherent risks of working at height:**
  - Fall protection equipment that fails inspection must be removed from service and tagged "Unusable." The equipment should then be returned to Safewaze for repair / service (if applicable) or destroyed. For questions regarding service / repair of components, contact Safewaze.
  - Never exceed the maximum allowable weight capacity of your fall protection equipment.
  - Never exceed the maximum free fall distance of your fall protection equipment.
  - Only Safewaze, or entities authorized in writing by Safewaze, may make repairs to Safewaze fall protection equipment.
  - User(s) of Safewaze fall protection equipment must ensure that their health and physical condition allows them to withstand all forces and potential risks associated with working at heights. ANSI limits the weight capacity of fall protection equipment to a maximum of 310 lbs. Some equipment covered in this manual may indicate a weight capacity in excess of 310 lbs. Although some equipment may be rated to a higher capacity, it should be noted that heavier users are at an increased risk of serious injury or death. This being due to increased forces on the body during a fall and the risk for accelerated onset of suspension trauma.
  - Use of a body belt is NOT authorized for fall arrest applications. Use only a Full Body Harness (FBH).
  - Always wear required personal protective equipment when installing, using, or inspecting this equipment.
  - If conducting training operations with this equipment, ensure that a secondary fall protection system is installed and utilized in a manner that does not expose the trainee to unintended fall hazards.
  - Immediately seek medical attention in the event a worker suffers a fall arrest incident.
  - Certain subsystems may interfere with the proper operation of the equipment in this manual. Use only compatible connections. Contact Safewaze for questions regarding compatibility of equipment or components not covered in this manual.
  - Avoid objects, equipment, or surfaces that could harm the user or equipment.
  - User must ensure that there is adequate fall clearance when working at height.
  - Extra precautions must be taken if working in the vicinity of moving machinery, electrical hazards, chemical hazards, sharp edges, explosive or toxic gases, extreme temperatures, or below overhead equipment or materials that could impact the user and their fall protection equipment.
  - If work is conducted in a high heat environment, ensure that Arc Flash or other suitable fall protection equipment is utilized.

V3.0 2023 Copyright Safewaze

TABLE OF CONTENTS

1.0 INTRODUCTION 1
2.0 APPLICATION 1
3.0 APPLICABLE SAFETY STANDARDS 1
4.0 WORKER CLASSIFICATIONS 1
5.0 LIMITATIONS AND REQUIREMENTS 1
6.0 INSPECTION FREQUENCY 2
7.0 PURPOSE 2
8.0 SPECIFICATIONS 2
9.0 FALL PROTECTION AND RESCUE PLAN 4
10.0 NORMAL OPERATIONS 4
11.0 COMPATIBILITY OF COMPONENTS 4
12.0 COMPATIBILITY OF CONNECTORS 4
13.0 INSTALLATION 5
14.0 USE 11
15.0 PERFORMANCE 15
16.0 MAINTENANCE, SERVICE, AND STORAGE 15
17.0 INSPECTION 16
18.0 LABELING 16
19.0 INSPECTION LOG 17

User Information

Date of First Use: _____

Serial#: _____

Trainer: _____

User: _____

Do not throw away these instructions!

Read and understand these instructions before using equipment!

V3.0 2023 Copyright Safewaze

1.0 INTRODUCTION

Updates to OSHA regulation 1910.28 in 2018 mandated that fixed ladders would require a ladder safety system and/or personal fall arrest system other than the previously acceptable cages. Any new or repaired/replaced ladders would require immediate compliance, while all existing ladders were given until 2036 to comply with these changes. The Safewaze Ladder Climb System consists of a vertical cable and the necessary hardware to install onto most fixed ladders. When used in conjunction with a fall arrester and front D-ring Full Body Harness (FBH), this system complies with all OSHA regulations for fixed ladders.

2.0 APPLICATION

Safewaze Ladder Climb Systems are designed for use as part of a complete personal fall arrest system.

Figure 1 in this manual includes systems with a maximum capacity of either 2 or 4 users. These systems may also be used by individuals whose weight exceeds the standard 310 lbs. maximum as specified by ANSI. If a user weight exceeds 310 lbs., the maximum number of users must be adjusted as indicated below:

4 Users (Maximum): ANSI 130-310 lbs. (58.96-140.61 kg) per user (includes clothing, tools, and equipment)
2 Users (Maximum): OSHA up to 420 lbs. (190.51 kg) per user (includes clothing, tools, and equipment)

3.0 APPLICABLE SAFETY STANDARDS

Safewaze Ladder Climb Systems conform to the national standard(s) identified on their ID label. Refer to local, state, and federal (OSHA) requirements for additional information concerning the governing of occupational safety regarding Personal Fall Arrest Systems (PFAS). See Figure 19 for examples of product labeling. Applicable standards and regulations depend on the type of work being done, and might also include state-specific regulations.
When used according to instructions, this product meets:

TABLE 1 - APPLICABLE STANDARDS AND REGULATIONS

ANSI STANDARDS

ANSI	A14.3	American National Standard for Ladders - Fixed - Safety Requirements

OSHA REGULATIONS

OSHA	1926.1053	Stairways and Ladders
OSHA	1910.29	Fall Protection Systems and Falling Object Protection
OSHA	1910.140	Personal Fall Protection Systems
OSHA	1926.502	Fall Protection Systems Criteria and Practices

4.0 WORKER CLASSIFICATIONS

Understand the definitions of those who work in proximity of, or may be exposed to, fall hazards or rescues.

Qualified Person: "Qualified Person" means one who, by possession of a recognized degree, certificate, or professional standing, or who by extensive knowledge, training, and experience, has successfully demonstrated his ability to solve or resolve problems relating to the subject matter, the work, or the project.

Competent Person: "Competent Person" means one who is capable of identifying existing and predictable hazards in the surroundings or working conditions which are unsanitary, hazardous, or dangerous to employees, and who has authorization to take prompt corrective measures to eliminate them.

Authorized Person: "Authorized Person" means a person approved or assigned by the employer to perform a specific type of duty or duties or to be at a specific location or locations at the job site.

It is the responsibility of a Qualified or Competent person to supervise the job site and ensure safety regulations are complied with.

5.0 LIMITATIONS AND REQUIREMENTS

When installing or using this equipment always refer to the following requirements and limitations:

- **Capacity:** Safewaze Ladder Climb Systems are designed to meet the requirements of ANSI Z359.16 when used with a compliant fall arrester (130-310 lbs.) and OSHA up to (420 lbs.).
- **Anchorage:** Anchorages selected for fall arrest systems shall have a strength capable of sustaining static loads applied in the directions permitted by the system of at least:

  1. 5,000 lbs. (2267.9 kg) for non-certified anchorages, or
  2. Two times the maximum arresting force for certified anchorages.

  When more than one fall arrest system is attached to an anchorage, the strengths set forth in (1) and (2) above shall be multiplied by the number of systems attached to the anchorage.

  From OSHA 1926.502 and 1910.66:
  Anchorages used for attachment of personal fall arrest systems shall be independent of any anchorage being used to support or suspend platforms and capable of supporting at least 5,000 lbs. (2267.9 kg) per user attached, or be designed, installed, and used as part of a complete personal fall arrest system which maintains a safety factor of at least two and is under the supervision of a qualified person.

V3.0 2023 Copyright Safewaze

- **Fall Clearance:** There must be sufficient clearance below the anchorage connector to arrest a fall before the user strikes the ground or an obstruction. When calculating fall clearance, account for a MINIMUM 2' safety factor, deceleration distance, user height, length of Lanyard/SRL, and all other applicable factors.
- The Safewaze Ladder Climb System is not designed, nor intended, to be installed on portable ladders. This system is designed for use on structures that are primarily vertical. The system should never be used on a structure that exceeds a 15°angle from vertical.
- **Full Body Harnesses:** Only Full Body Harnesses with a sternal (front) D-ring may be used with the Safewaze Ladder Climb System.
  Note: Never use combinations of components or subsystems that may affect or interfere with the safe function of each other.
- **Personal Fall Arrest:** The Safewaze Ladder Climb System can be used as part of a complete Personal Fall Arrest System (PFAS) for a maximum of up to 4 users. The structure utilized for attachment must be capable of withstanding a load of 5,000 lbs. in all directions permitted by the system.

FIGURE 1 - MAX SYSTEM USER CAPACITY

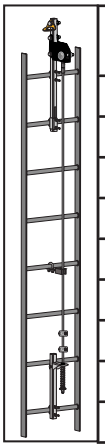

Part Number (Galvanized Steel)	Part Number (Stainless Steel)	Max Users
019-12001	022-12111	2
019-12002	022-12112	2
019-12003	022-12113	2
019-12004	022-12114	2
019-12005	022-12115	2
019-12006	022-12116	2
019-12007	022-12117	2
019-12008	022-12118	2
019-12009	022-12119	2

Part Number (Galvanized Steel)	Max Users
019-12032	2
019-12034	2
019-12036	2
019-12038	2

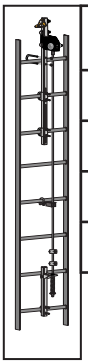

Part Number (Galvanized Steel)	Part Number (Stainless Steel)	Max Users
019-12041	022-12128	4
019-12043	022-12130	4
019-12045	022-12132	4
019-12047	022-12134	4

****NOTE**: Maximum number of users based on the use of a Cable fall arrester. If not used with an energy absorbing fall arrester, then the OSHA max of 1 user applies. ANSI specifies that ladder fall protection systems be designed to accommodate a minimum of 2 users simultaneously. The maximum number of simultaneous users allowed on the system should be determined by a competent person based on the jobsite conditions and any limitations set by the manufacturer.

6.0 INSPECTION FREQUENCY

The user or Authorized Person must inspect this equipment prior to each use. Jobsite conditions should be used to determine proper inspection frequency. Figure 2 indicates key inspection points of the Safewaze Ladder Climb System. The Safewaze Ladder Climb System must also be inspected annually at a minimum, by a Competent Person other than the user. These inspections must be documented in the Inspection Log located at the back of this manual.

7.0 PURPOSE

Safewaze Ladder Climb Systems are used as part of a PFAS. The systems are designed to safely arrest the user in a fall from height while minimizing forces associated with the fall.

8.0 SPECIFICATIONS

FIGURE 2 - LADDER CLIMB SYSTEM COMPONENTS

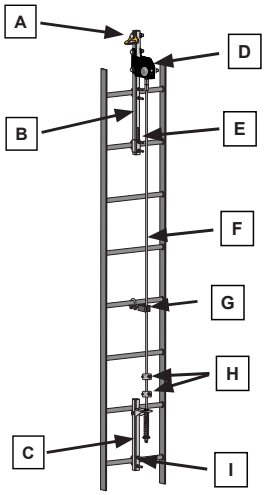

Lettered Boxes: While indicating specific components of the Ladder Climb System, the lettered boxes also indicate key components when conducting Pre-Use, Annual, or other types of inspections.

	Component	Material(s)
A	Transition Point	Forged Steel (Painted)
B	Top Bracket	Galvanized or Stainless Steel
C	Bottom Bracket Assembly	Galvanized or Stainless Steel
D	Cable Attachment Point	Stainless Steel
E	Backer Bracket	Galvanized or Stainless Steel
F	Cable	3/8" 7x19 Galvanized or Stainless Steel
G	Cable Intermediate Guide	Galvanized or Stainless Steel, Synthetic Rubber
H	Cable Fist Grips	Galvanized or Stainless Steel
I	U-Bolts	Galvanized or Stainless Steel

****NOTE:** Safewaze Ladder Climb Systems are available in both Galvanized and Stainless Steel Configurations. The exception being 2 User Systems with 4 ft. extension. See Figure 3 on Page 3 for Galvanized / Stainless Steel Systems and Individual Component Part Numbers.

FIGURE 3 - COMPLETE LADDER CLIMB SYSTEMS

2 User Capacity Systems

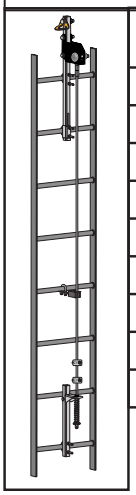

Part Number (Galvanized Steel)	Part Number (Stainless Steel)	System Length
019-12001	022-12111	20 ft.
019-12002	022-12112	30 ft
019-12003	022-12113	40 ft
019-12004	022-12114	50 ft.
019-12005	022-12115	60 ft.
019-12006	022-12116	70 ft.
019-12007	022-12117	80 ft.
019-12008	022-12118	90 ft.
019-12009	022-12119	100 ft.

4 User Capacity Systems

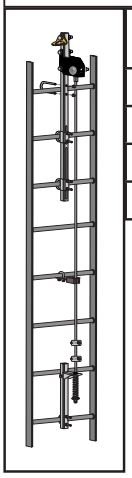

Part Number (Galvanized Steel)	Part Number (Stainless Steel)	System Length
019-12041	022-12128	30 ft.
019-12043	022-12130	50 ft.
019-12045	022-12132	70 ft.
019-12047	022-12134	90 ft.

2 User Capacity Systems (w/4 ft. extension)

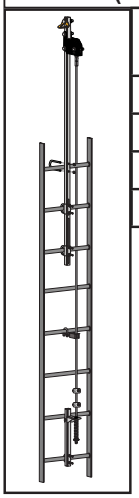

Part Number (Galvanized Steel)	System Length
019-12032	30 ft.
019-12034	50 ft.
019-12036	70 ft.
019-12038	90 ft.

Cable Assemblies

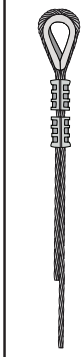

Part Number (Galvanized Steel)	Part Number (Stainless Steel)	System Length
019-12012	022-12136	20 ft.
019-12013	022-12137	30 ft.
019-12014	022-12138	40 ft.
019-12015	022-12139	50 ft.
019-12016	022-12140	60 ft.
019-12017	022-12141	70 ft.
019-12018	022-12142	80 ft.
019-12019	022-12143	90 ft.
019-12020	022-12144	100 ft.
019-12021	022-12145	**Custom**

***For cable assemblies to be used on the 4' extended top systems (019-12032 through 019-12038), you must order a longer length of cable to account for the extension length. We recommend ordering the next length of cable beyond the system length and cutting the excess cable or using the fist grips on the bottom bracket to adjust.**

Intermediate Guide (90°)

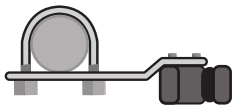

Part Number (Galvanized Steel)	Part Number (Stainless Steel)
019-12026	022-12106

Intermediate Guide (Straight)

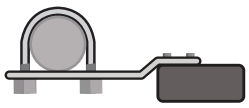

Part Number (Galvanized Steel)	Part Number (Stainless Steel)
019-12027	022-12107

Ladder System U-Bolt

Part Number (Galvanized Steel)	Part Number (Stainless Steel)
019-12028	022-12108

Nuts (2 pc Set)

Part Number (Galvanized Steel)	Part Number (Stainless Steel)
019-12029	022-12109

Backer Bracket

Part Number (Galvanized Steel)	Part Number (Stainless Steel)
019-12030	022-12110

Individual Bottom Bracket Part Number (Compatible with all Systems)

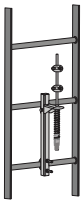

Part Number (Galvanized Steel)	Part Number (Stainless Steel)
019-12025	022-12105

Individual Top Bracket Part Number (2 User Capacity)

Part Number (Galvanized Steel)	Part Number (Stainless Steel)
019-12022	022-12102

Individual Top Bracket Part Number (w / 4' Extension) (2 User Capacity)

Part Number (Galvanized Steel)
019-12023

Individual Top Bracket Part Number (4 User Capacity)

Part Number (Galvanized Steel)	Part Number (Stainless Steel)
019-12024	022-12104

Ladder System Label

Part Number (Galvanized Steel)	Part Number (Stainless Steel)
019-12031	019-12031

V3.0 2023 Copyright Safewaze

9.0 FALL PROTECTION AND RESCUE PLAN

When using this equipment, employers must create and maintain a Fall Protection and Rescue Plan and provide the means to implement those plans. The plans must be communicated to equipment users, authorized persons, and rescuers. These plans must meet ANSI Z359.2 “Minimum Requirements for a Comprehensive Managed Fall Protection Program.” They should include the requirements and guidelines for the employer’s managed Fall Protection Program. This would include eliminating and controlling fall hazards, duties and training, policies, fall protection procedures, rescue procedures, incident investigations, and evaluation of the program’s effectiveness.

10.0 NORMAL OPERATIONS

During normal operations the Ladder Climb System allows the user to move freely up and down the fixed ladder assembly while providing protection in the event of a fall. The cable grab should move with the user during work operations. The user should always ensure the cable grab is positioned above the sternal (front) D-ring when attached to the Ladder Climb System. Never position the cable grab in a configuration where the connection point is below the user. Snaphook or carabiner components used with the Ladder Climb System must meet the requirements of ANSI Z359.12. Current OSHA regulations (1926.1053) limit the connection distance between the carrier and the harness attachment element to 9 inches (229 mm).

11.0 COMPATIBILITY OF COMPONENTS

Safewaze Fall Protection Equipment is designed and tested using Safewaze components and subsystems only. A Qualified Person should make the determination of Safewaze equipment compatibility with equipment not manufactured by Safewaze. Replacement or substitution of equipment not manufactured by Safewaze may degrade, or reduce, the safety and reliability of the complete system.

IMPORTANT: Read and follow manufacturer’s instructions for associated components and subsystems in your personal fall arrest system.

12.0 COMPATIBILITY OF CONNECTORS

Connectors are compatible with connecting elements when they have been designed to work together in such a way that their sizes and shapes do not cause their gate mechanisms to inadvertently open, regardless of how they become oriented. Connectors (hooks, carabiners, and D-rings) must be capable of supporting at least 5,000 lbs. (2267.9 kg). Connectors must be compatible with the anchorage or other system components (See Figure 5). Do not use equipment that is not compatible. Non-compatible connectors may unintentionally disengage (See Figure 4). Connectors must be compatible in size, shape, and strength. Self-locking snap hooks and carabiners are required by ANSI Z359 and OSHA guidelines. Contact Safewaze if you have any questions about compatibility.

NOTE: SOME SPECIALTY CONNECTORS HAVE ADDITIONAL REQUIREMENTS. CONTACT SAFEWAZE WITH QUESTIONS.

FIGURE 4 - UNINTENTIONAL DISENGAGEMENT

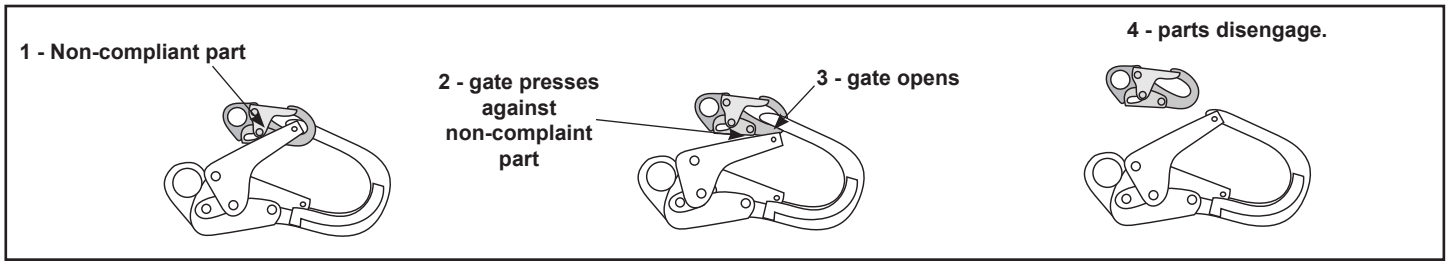

Using a connector that is undersized or irregular in shape (1) to connect a snap hook or carabiner could allow the connector to force open the gate of the snap hook or carabiner. When force is applied, the gate of the hook or carabiner presses against the non-compliant part (2) and forces open the gate (3). This allows the snap hook or carabiner to disengage (4) from the connection point.

12.1 MAKING CONNECTIONS

Snap hooks and carabiners used with this equipment must be double locking. Ensure all connections are compatible in size, shape, and strength. Do not use equipment that is not compatible. Ensure all connectors are fully closed and locked.

Safewaze connectors (snap hooks and carabiners) are designed to be used only as specified in each product’s user’s instructions. (See Figure 5) for examples of inappropriate connections. Do not connect snap hooks and carabiners:

- To a D-ring to which another connector is attached.
- In a manner that would result in a load on the gate (with the exception of Tie-Back hooks). NOTE: Large snap hooks must not be connected to objects which will result in a load on the gate if the hook twists or rotates, unless the snap hook complies with ANSI Z359.12 and is equipped with a 3,600 lbs. (1632.9 kg) gate. Check the marking on your snap hook to verify its compatibility.
- In a false engagement, where features that protrude from the snap hook or carabiner catch on the anchor, and without visual confirmation seems to be fully engaged to the anchor point.
- To each other.
- By wrapping the lifeline around an anchor and securing to lifeline except as allowed for Tie-Back models
- To any object which is shaped or sized in a way that the snap hook or carabiner will not close and lock, or that roll-out could occur.
- In a manner that does not allow the connector to align properly while under load.

FIGURE 5 - INAPPROPRIATE CONNECTIONS

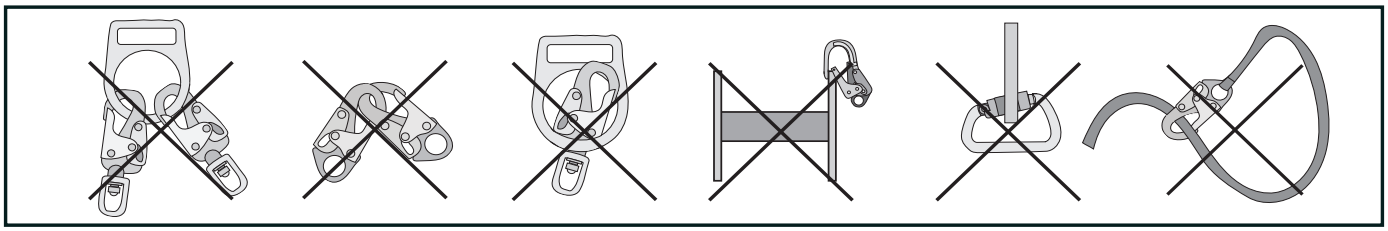

13.0 INSTALLATION

The following limitations must be considered prior to installing the Safewaze Ladder Climb System:

1. **Structure:** The structure to which the system is attached must be capable of withstanding the loads applied by the system in the event of a fall.

2. **System Capacity:** The maximum number of users allowed on the Safewaze Ladder Climb System simultaneously is 2, with a maximum weight of **ANSI** 310 lbs. per user (including clothing, tools, and equipment) and **OSHA** Up to 420 lbs. (190.51 kg) each. System numbers 019-12041, 019-12043, 019-12045, 019-12047, 022-12128, 022-12130, 022-12132, and 022-12134 allow a maximum number of 4 users with a maximum weight of 310 lbs. per user. Maximum number of users per system is based upon use of the EVO 3/8" Cable Sleeve or a ANSI Z359.16 compliant fall arrester.

3. **Environmental Hazards:** Use of the Safewaze Ladder Climb System in areas where environmental hazards exist may require additional precautions. These hazards may consist of but are not limited to: Electrical, Chemical, Thermal, Seawater, Corrosive Agents, Explosive Gasses, Toxic Gasses, Moving Machinery, and Sharp Edges.

Structure Load Requirements

Static Loading: The static loads imposed on the system include the weight of the top bracket, weight of the length of cable used with the system and a Safety Factor. The following is an example of static loads imposed on the system for a 50 ft (15.24 m) system:

Top Bracket Weight = **24 lbs. (10.9 kg)**
50 ft. (15.24 m) of 3/8" (9.5 mm) Galvanized Cable Weight = **13.25 lbs. (6.01 kg)**

Total Static Loading: (24 lbs. + 13.25 lbs.) x 1.2 (Safety Factor) = 47.3 lbs.

Dynamic Loading: The following are the Dynamic Loads imposed onto the Ladder Climb System per user:

One User = **2,700 lbs. (12 kN)**
Two Users = **3,320 lbs. (14.76 kN)**
Three Users = **3,940 lbs. (17.51 kN)**
Four Users = **4,560 lbs. (20.27 kN)**

Total Loading: The total load must account for the Static and Dynamic Loading indicated above for the total length of the system. The following is an example of the Total Loading imposed onto the structure given that the example system is 50 ft (15.24 m) in length:

Static Loading for a 50 ft. (15.24 m) system = **47.3 lbs.**
Dynamic Load for Two Users = **3,320 lbs.**

Total Loading = 47.3 lbs. + 3,320 lbs. = 3,367.3 lbs.

Bottom Bracket Assembly: The bottom bracket assembly connection point must be capable of supporting the system pretension load of **350 lbs. (1.6 kN)** in the direction of loading. The required bracket load may be assumed to be distributed evenly between the number of rung attachments for calculation purposes.

Total Loading of the system onto the attachment structure can be reduced by limiting the number of users on the system.

Installation of the Safewaze Ladder Climb System must be supervised by a Qualified Person.

Before Each Use

Users of personal fall arrest systems must have a rescue plan in place if the user cannot rescue themselves, as well as the means to carry out the rescue.

The user must read and understand these User Instructions, as well as the User Instructions for every component/subsystem of the personal fall arrest system.

The entire Safewaze Ladder Climb System, and its subsystems, must be inspected prior to each use for wear, damage, and other deterioration. All snaphooks and carabiners must be able to self-close and lock. System must be properly tensioned. No load indicators shall be deployed (See Figure 14). Damaged and other deteriorated and defective components must be immediately removed from service, in accordance with the requirements of OSHA 1910.66 and 1926.502. In order to begin installation of the Safewaze Ladder Climb System the installer needs to know the part numbers of the system, the number of Intermediate Guides required, and length of the cable assembly. Inspect all components of the system prior to beginning installation to ensure no damage occurred during shipping. In the event any damage is discovered during the pre-installation inspection, contact Safewaze for replacement guidance.

The Safewaze Ladder Climb System is designed for easy installation onto a variety of suitable structures. For systems 50 ft. or greater in length, a cable Intermediate Guide must be used. A cable Intermediate Guide must be used every 25 ft. to 30 ft. on systems greater than 50 ft. in length.

As a general rule, the Safewaze Ladder Climb System should be installed from the top of the structure down.

Installation Steps:

Step 1: Install the Top Bracket onto the top two rungs (top three rungs for 4 user capacity bracket) of the ladder
Step 2: Connect the cable to the Top Bracket
Step 3: Install the Cable Intermediate Guides as necessary
Step 4: Install the Bottom Bracket Assembly
Step 5: Tension the Cable
Step 6: Inspect the Installation

Installation time can be reduced, and safety increased, by pre-planning the installation process.

Step 1: Installation of Top Bracket
Prior to installation of the Top Bracket, a Qualified Person should determine that the structure is capable of meeting the load requirements of the system. Ensure that the Top Bracket is positioned to allow users safe access when connecting or disconnecting from the system. As a general rule, the Top Bracket is centered on the climbing structure to allow for ease of climbing. However, the bracket may be installed towards the side of the structure if necessary.

Two User Capacity Top Bracket - Part# 019-12022 / 022-12102 (Figure 6a):
Line up the pre-drilled holes on the bracket with the top rung of the climbing structure. Slide the upper U-bolt over the back of the rung and through the two pre-drilled holes in the bracket. Thread nuts onto the U-bolts and torque to 20-25 ft. lbs. The Top Bracket includes a pre-cut slot for adjustment to align the lower U-bolt with the lower rung. Position the lower U-bolt on the lower rung using the pre-cut slot, install the nuts onto the clamp, and torque to 20-25 ft. lbs.

Four User Capacity Top Bracket - Part# 019-12024 / 022-12104 (Figure 6b):
Line up the pre-drilled holes on the bracket with the top rung of the climbing structure. Slide the upper U-bolt over the back of the rung and through the two pre-drilled holes in the bracket. Thread nuts onto the U-bolts and torque to 20-25 ft. lbs. The Top Bracket includes pre-cut slots for adjustment to align the middle and lower U-bolts with their corresponding rungs. Position the middle and lower U-bolts on the rungs, install the nuts onto the clamps, and torque to 20-25 ft. lbs.

Two User Capacity Top Bracket with 48" Extension - Part# 019-12023 (Figure 6c):
Line up the pre-drilled holes on the bracket with the top rung of the climbing structure. Slide the upper U-bolt over the back of the rung and through the two pre-drilled holes in the bracket. Thread nuts onto the U-bolts and torque to 20-25 ft. lbs. The Top Bracket includes pre-cut slots for adjustment to align the middle and lower U-bolts with their corresponding rungs. Position the middle and lower U-bolts on the rungs, install the nuts onto the clamps, and torque to 20-25 ft. lbs.

FIGURE 6 - TOP BRACKET INSTALLATION

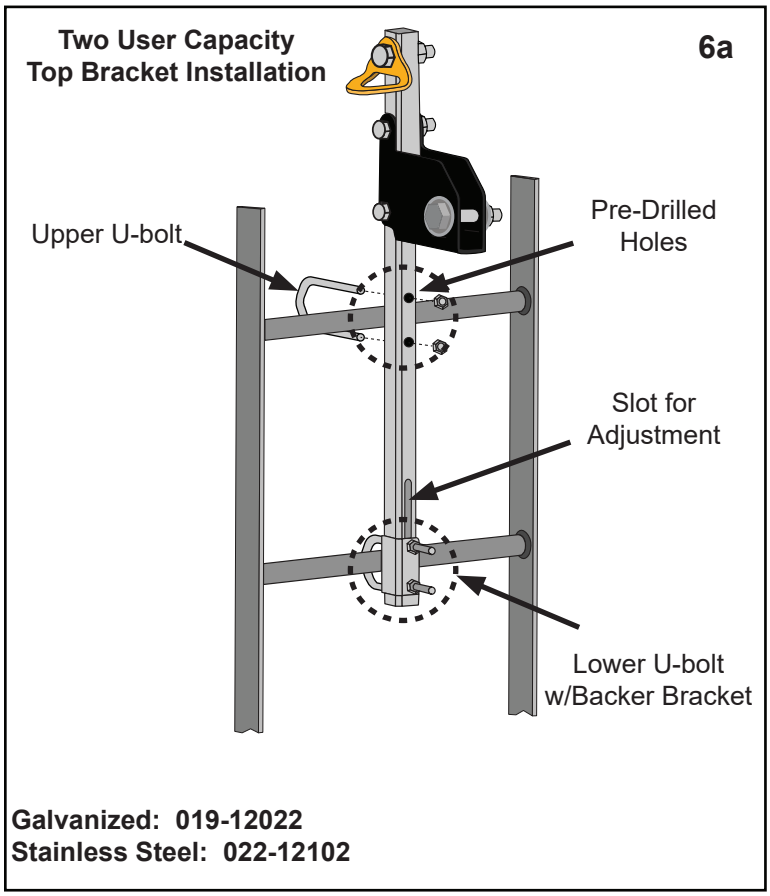

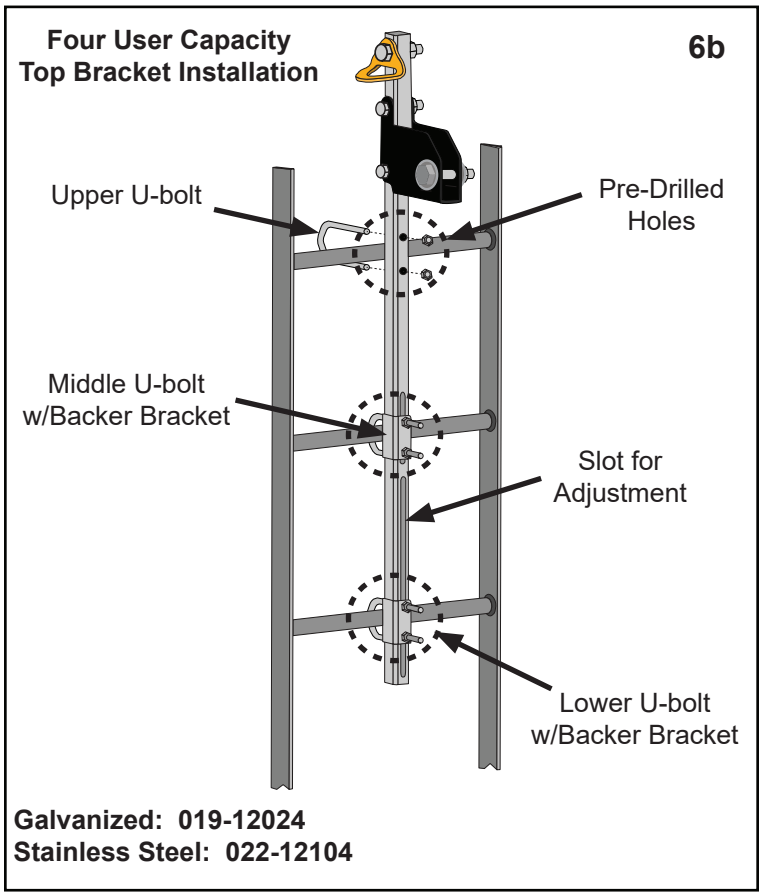

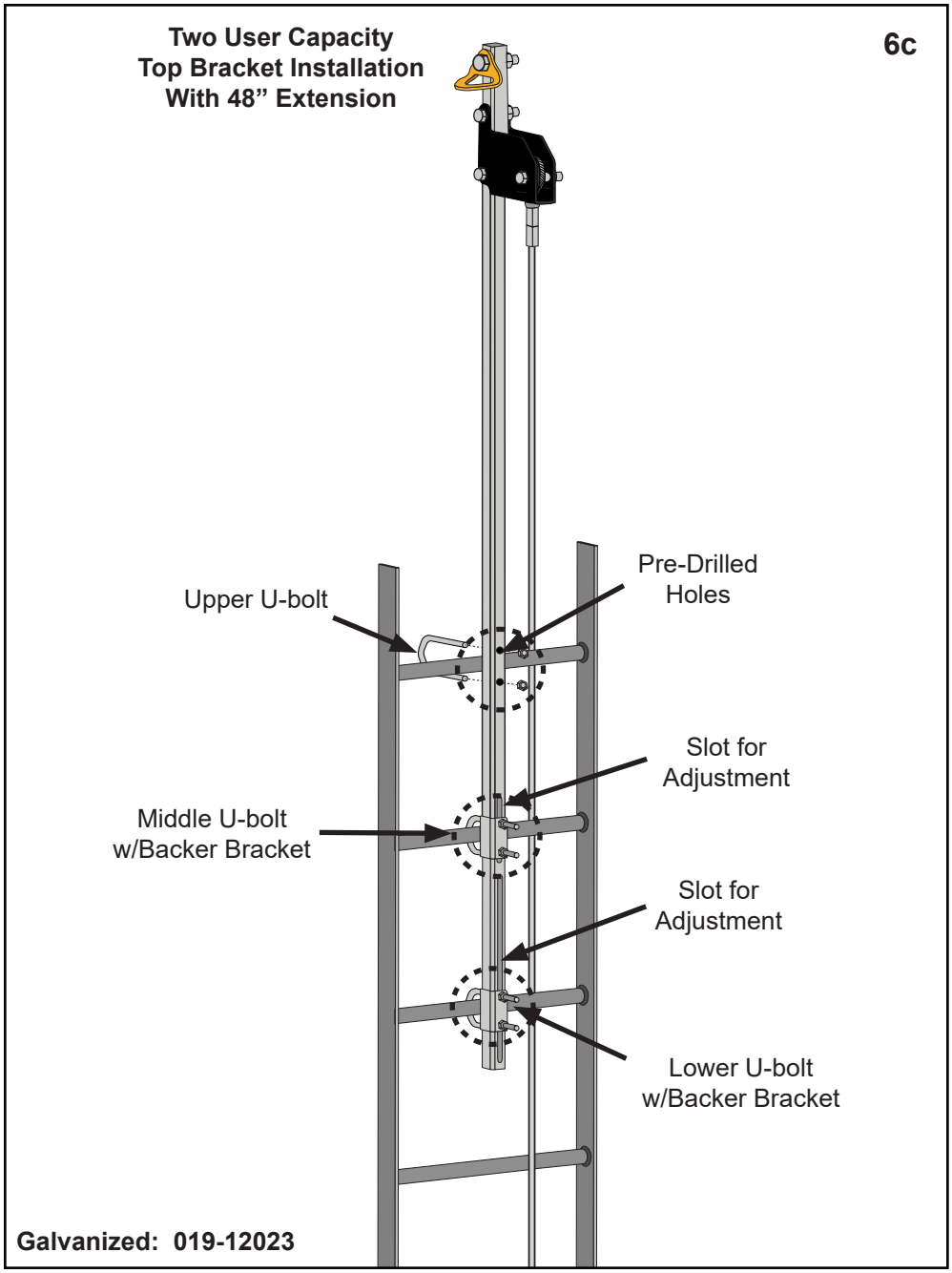

TABLE 2 - LADDER RUNG COMPATIBILITY

Rung Spacing and Diameter Compatibility:	
Spacing	9” - 12.25” (200mm - 310mm)
Cylindrical Rung	0.5” - 1.6” (13mm-40mm) diameter
Square Rung	0.5” - 1.6” (13mm-40mm) diameter
Diamond Rung	0.5” - 1.6” (13mm-40mm) height
Angle Iron	0.5” - 1.6” (13mm-40mm) leg height
Rectangular Rung	0.5” - 1.6” (13mm-40mm) height, 0.5” - 1.9” (13mm-48mm) width

Step 2: Connect the Cable to the Top Bracket
Prior to connecting the Cable Assembly to the Top Bracket, take the cable and uncoil it on ground in a clean area and inspect for any damage. If any shipping damage is found on the Cable Assembly, DO NOT USE.

To connect the cable to the Ladder Climb System, first remove the Cable Connection Bolt from the Top Bracket Assembly (See Figure 7A). Insert the thimble end of the cable through the pre-cut slot in the bottom of the Top Bracket Assembly (See Figure 7A). Align the thimble end of the Cable Assembly within the Top Bracket and re-insert the Cable Connection Bolt through the Top Bracket and the thimble end of cable. Thread nut onto the Cable Connection Bolt and tighten to 40 to 45 ft. lbs. (See Figure 7B & 7C).

FIGURE 7 - CONNECT CABLE TO TOP BRACKET

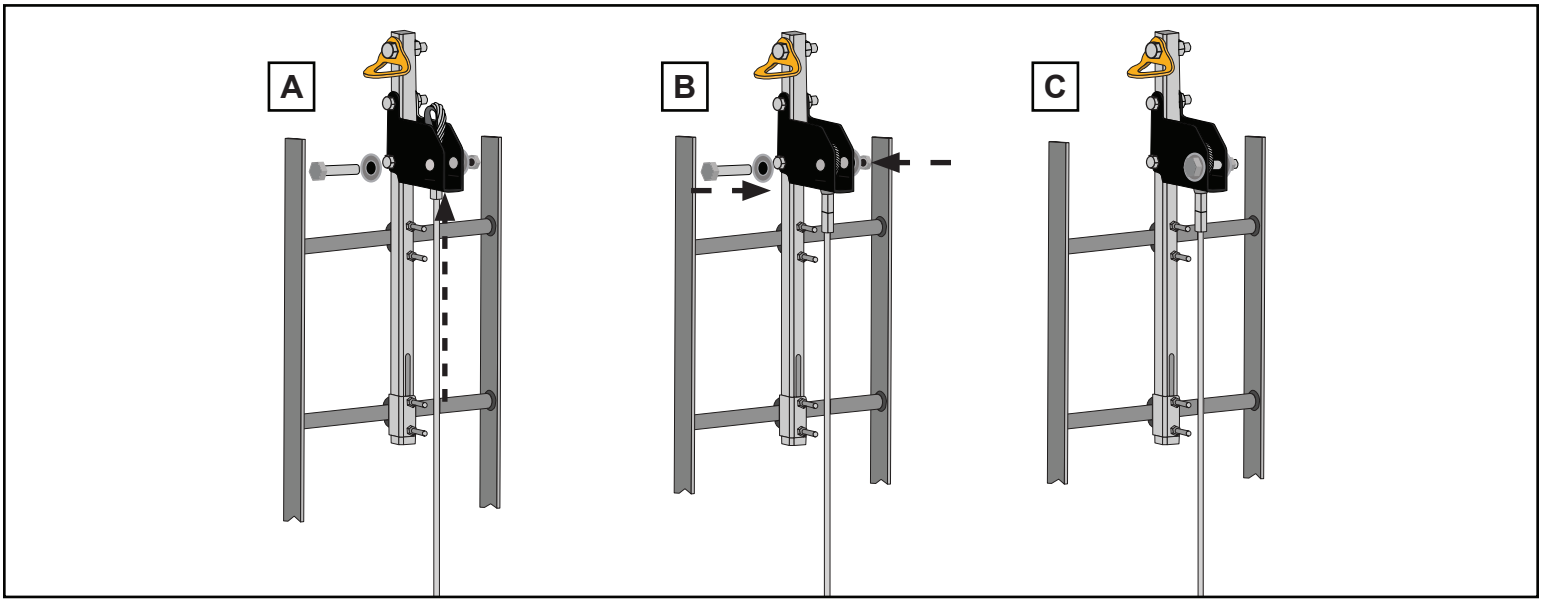

Step 3: Install Cable Intermediate Guides
The Ladder Climb System Cable Intermediate Guides are designed to prevent abrasion of the Cable Assembly on ladder rungs and to prevent excessive movement of the cable from side to side while the user is climbing. They can also be used if high winds are prevalent at the structure location to reduce harmonic vibration on the cable assembly. The Intermediate Guides should be installed every 25-30 ft. along the cable between the Top and Bottom Brackets. See Figure 8A & 8B for typical installation. In instances where high winds may be prevalent, Intermediate Guides that are oriented in an “L” shape can be installed. The “L” type Intermediate Guides should be installed in a interval orientation to the cable (left and right) as the example indicates in Figures 8C & 8D.

FIGURE 8 - INSTALL CABLE INTERMEDIATE GUIDES

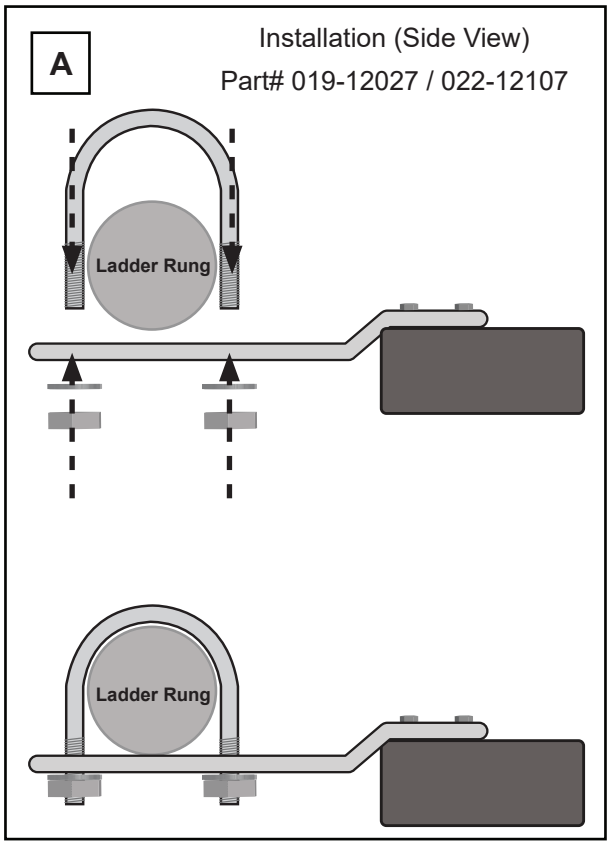

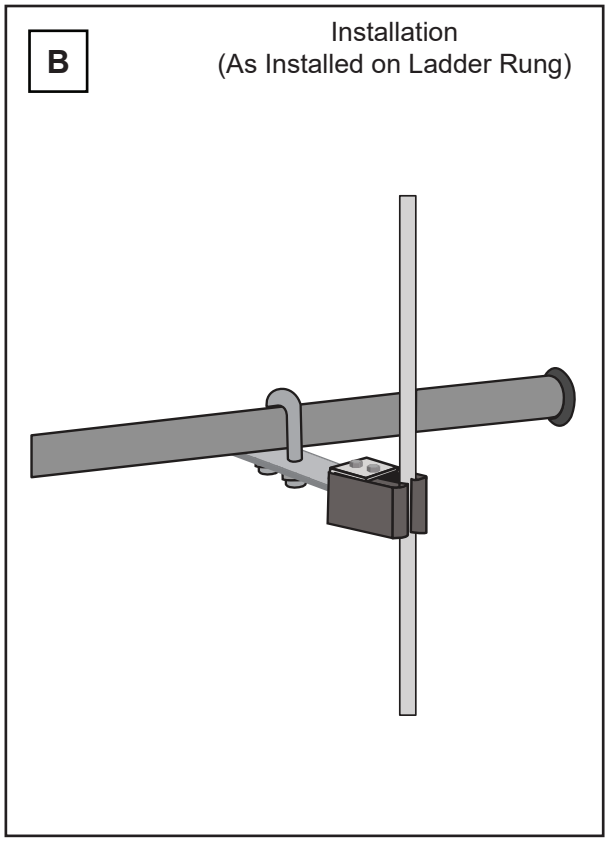

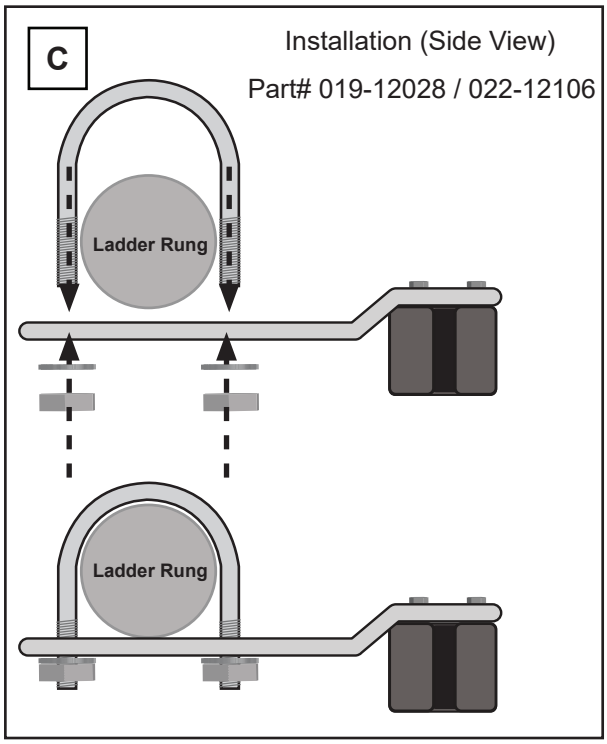

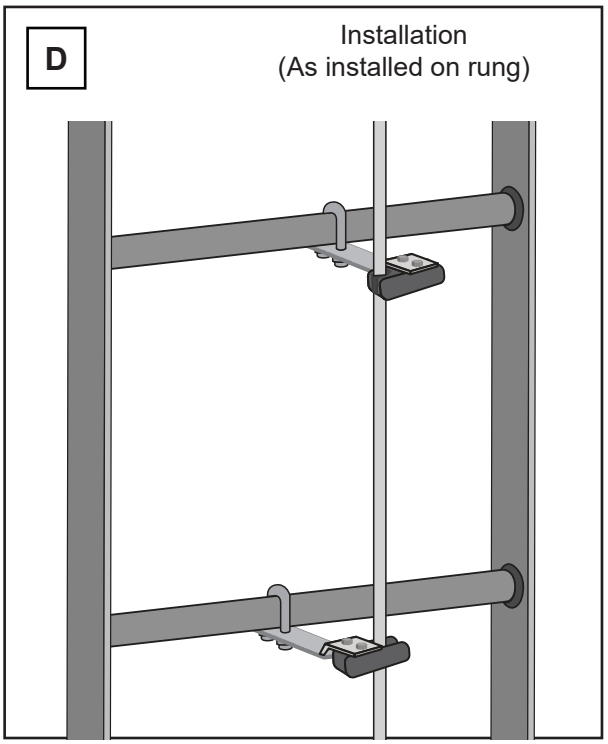

Step 4: Install Bottom Bracket Assembly
Align pre-drilled holes on the bracket with the bottom rung of the climbing structure. Slide the U-bolt over the back of the rung and through the two pre-drilled holes in the bracket (See Figure 9). Thread nuts onto the U-bolt. Tighten the U-bolt to 20-25 ft. lbs.

FIGURE 9 - BOTTOM BRACKET INSTALLATION

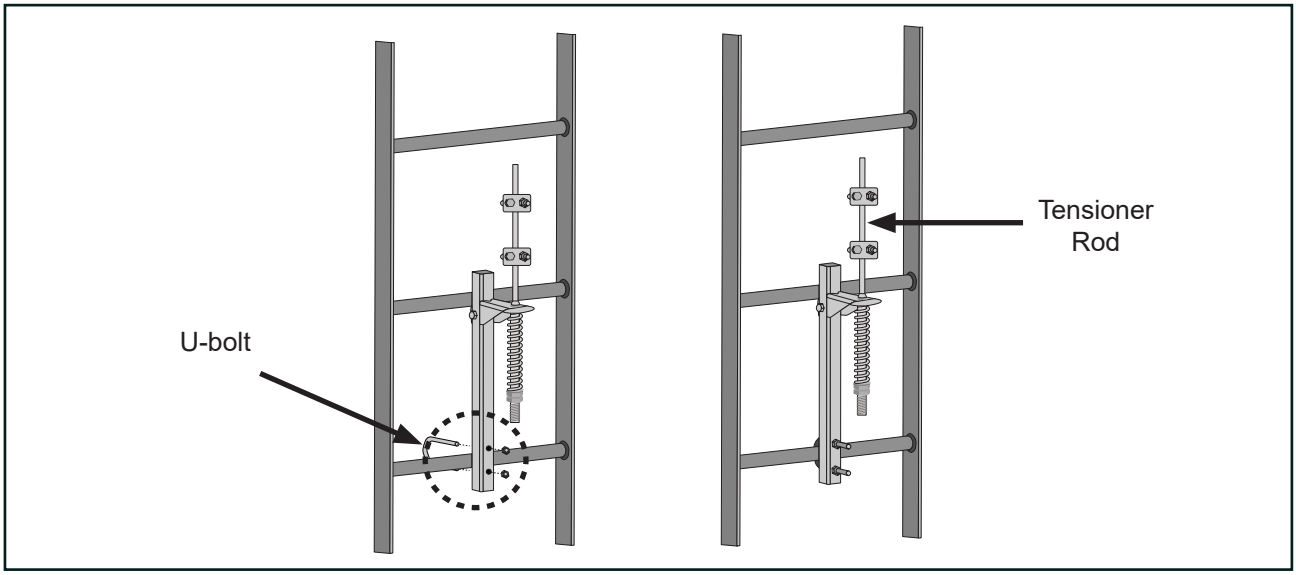

Step 5: Tension the Cable
Loosen the cable fist grips to attach the cable assembly to the tensioner rod on the Bottom Bracket assembly. Insert cable through fist grips, remove excess slack from the system by hand, but do not yet fully re-tighten fist grips (See Figure 10A & 10B).

FIGURE 10 - ATTACH CABLE TO TENSIONER ASSEMBLY

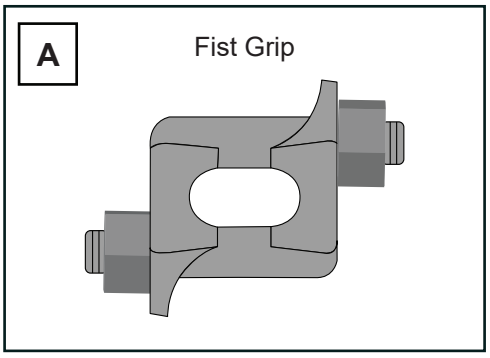

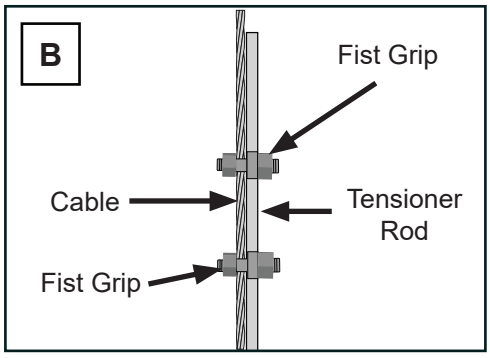

Slide washer (a) onto tensioning assembly. Thread the tensioning nut (b) onto tensioner until approximately 3 to 5 threads are exposed below the nut (See Figure 11 - Step 1). Pull up on Tension Assembly until washer (a) contacts bottom of spring. Ensure excess cable slack is again removed from system and torque fist grips to 35 ft. lbs. (See Figure 11 - Step 2). Tighten tensioning nut (b) on tensioner until 1/2" of tension indicator (d) is visible or cable is taut. Tighten locking nut (c) until snug to tensioning nut (b). Cut excess slack off end of cable (e) (See Figure 11 - Step 3).

FIGURE 11 - TENSION THE CABLE

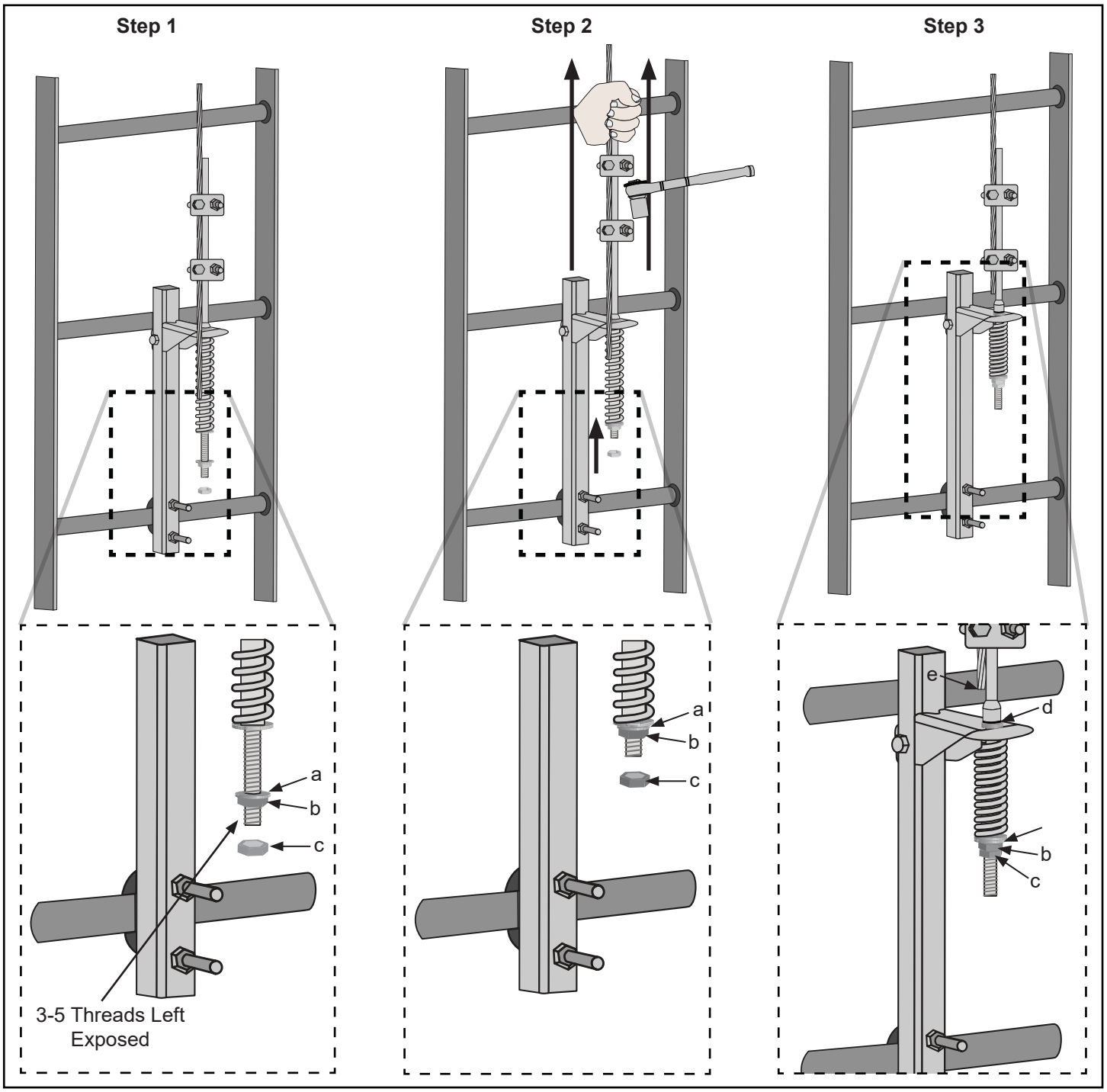

Step 6: Inspect the Installation

Affix the installation and inspection label in a prominent location on the structure (See Section 18 for example Labels).
Before installing the label mark the following:

- Installation Date
- Installer
- Maximum Number of Users per system
- System Length

After installation, the installer must inspect the system as follows:

- Ensure all fasteners are torqued to proper levels as per instructions
- Verify proper tension of the cable assembly and connection to bottom bracket
- Ensure all cable assembly components are installed as per instructions
- Visually inspect the cable assembly to confirm it does not abrade at any point on climbing structure
- Confirm that the system information is recorded on the label

14.0 USE

After installation, labeling, and inspection of the system as defined in Section 13.0, the Safewaze Ladder Climb System is ready for use.

Users of this system must be trained in its use and must read and understand all instructions provided with the system at time of shipment.

PPE must be utilized by all users. This should include but is not limited to eye protection, hard hat, appropriate footwear, gloves, and any other equipment deemed necessary by the Competent Person onsite.

A Full Body Harness (FBH) equipped with a Sternal (Front) D-ring is required for use of this system.

A 3/8” cable fall arrester is required in order to safely utilize the system.

Attach the 3/8” cable fall arrester to the cable assembly prior to beginning any climbing of the structure.

Once attached to the cable assembly, the user can begin climbing the structure. The user should always ensure that the fall arrester is as high as possible on the cable assembly relative to their body position.

The Safewaze Ladder Climb System is designed for use with an ANSI Z359.16 compliant cable fall arrester. The use of any other type of grab may be incompatible with the system and could create a serious safety hazard for the user. Do not use the Safewaze Ladder Climb System without first consulting with a Competent and/or Qualified Person at the worksite for approval. For any other questions regarding compatibility, please contact Safewaze Technical Support.

Ladder Climb System Transition to Work Area: The Safewaze Ladder Climb System is equipped with an anchorage point on the Top Bracket Assembly which allows the user to transition from the Ladder Climb System to their Personal Fall Arrest System (PFAS) (See Figure 12).

FIGURE 12 - TRANSITION POINT

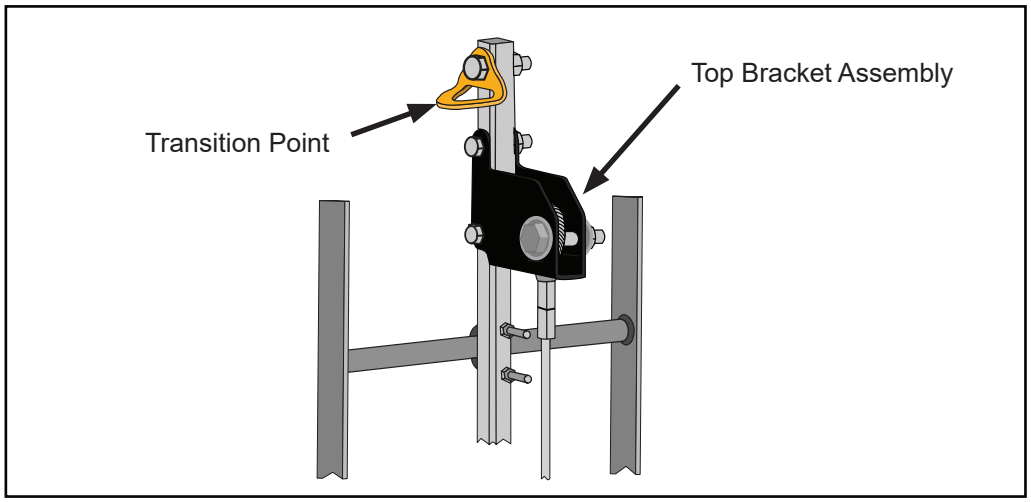

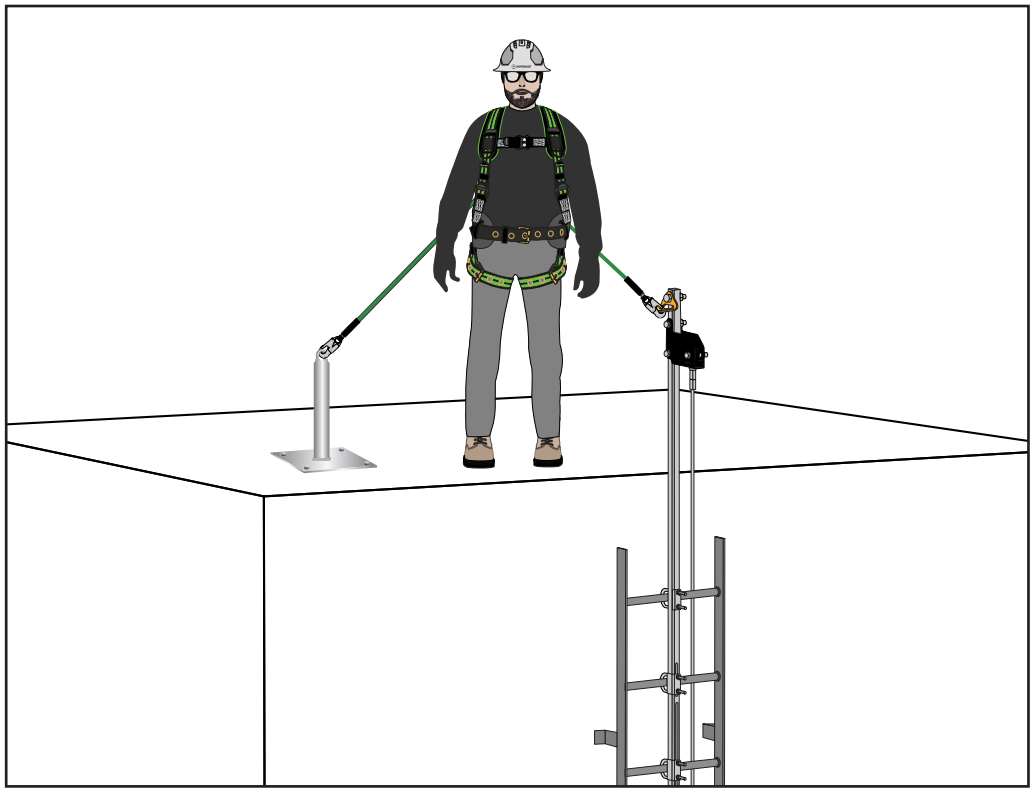

Operation of Cable Grab around Intermediate Guides: If the system is of sufficient length to have required the installation of Cable Intermediate Guides, the user must manually manipulate the Cable Assembly in order to "pass" the Intermediate Guide (See Figure 13A). This is accomplished by the user pulling out slightly on the cable assembly (See Figure 13B). This will temporarily disengage the cable from the Intermediate Guide which allows the fall arrester to "pass" by the Intermediate Guide (See Figure 13C). Once the fall arrester has passed the Intermediate Guide, the user must push slightly on the cable to ensure that it is once again held in place by the Intermediate Guide (See Figure 13D). DO NOT attempt to disconnect the fall arrester from the Cable Assembly at any time during climbing operations. Disconnection of the fall arrester from the Cable Assembly during climbing can result in serious injury or death.

FIGURE 13 - PASSING CABLE INTERMEDIATE GUIDES

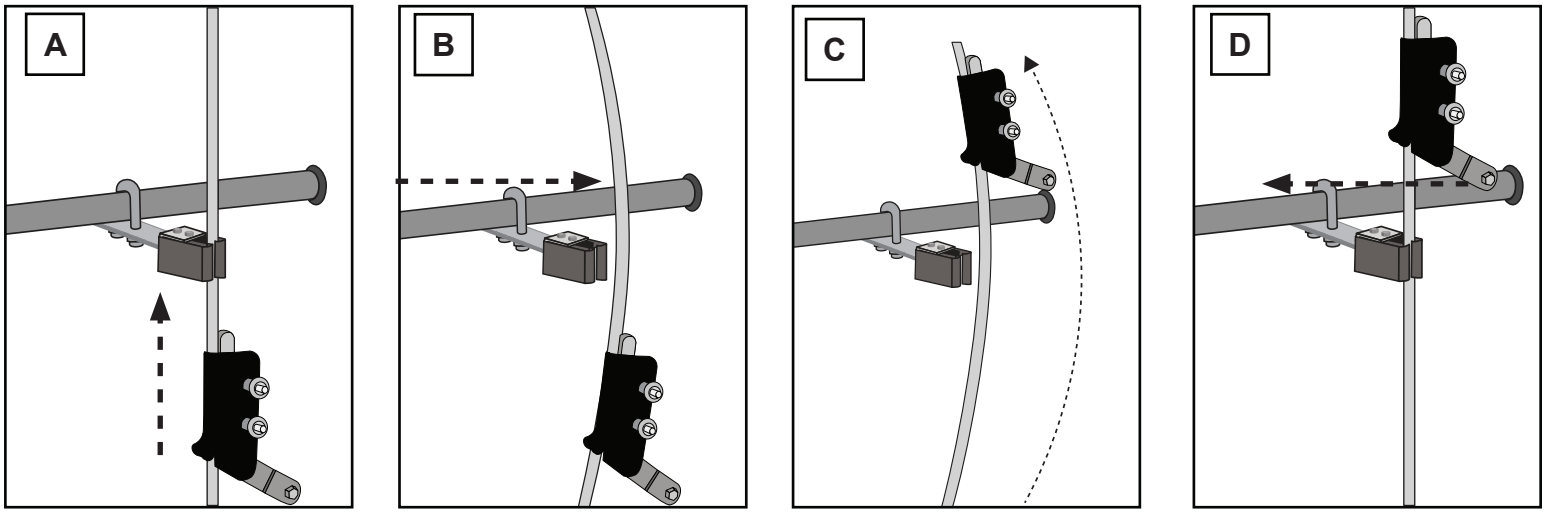

Energy Absorption/Fall Indicator: The Safewaze Ladder Climb System Top Bracket Assembly is designed to absorb fall arrest forces should a fall on the system occur. The Top Bracket Assembly has laser cut slots on each side of the assembly at the cable connection point (See Figure 14A). In the event of a fall, the slots allow the metal to deform inward and downward to absorb fall arrest forces (See Figure 14B and 14C). This deformation of the metal indicates that the system has been exposed to fall arrest forces. If this deformation is present during inspection, DO NOT use the system and REMOVE FROM SERVICE.

FIGURE 14 - ENERGY ABSORPTION / FALL INDICATOR

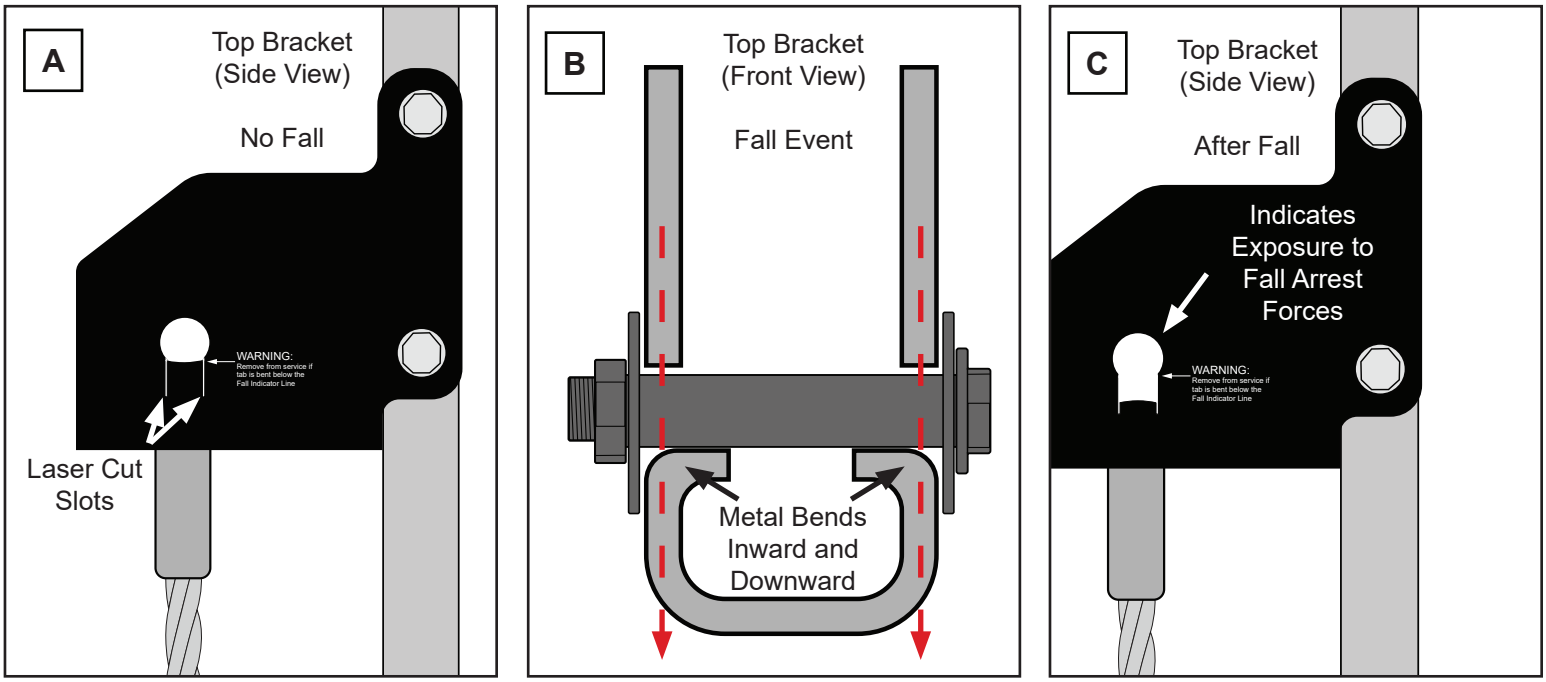

14.1 OPERATION

Inspect the Ladder Climb System as described in Section 17 before using the equipment. Ensure connections are compatible in size, shape, and strength. Ensure hooks are fully closed and locked. When the worker is fully attached, the worker is then free to move up or down the fixed ladder assembly. If a fall occurs, the cable grab will lock and arrest the fall. Upon rescue, remove the Ladder Climb System from use.

WARNING: Do not tie or knot the lifeline. Avoid lifeline contact with sharp or abrasive surfaces. Inspect the lifeline frequently for cuts, fraying, burns, or signs of chemical damage. Dirt, contaminants, and water can lower performance of the lifeline. Use caution near power lines. Failure to comply with this warning may result in serious injury or death.

WARNING: Contact Safewaze if you have questions regarding compatibility of this equipment that are not covered in this manual. Do not alter or misuse this equipment. Some subsystem components could affect the performance of the operation of this equipment. Do not anchor this product to moving machinery, or hazards that include chemical, electrical, or gaseous characteristics. Failure to comply with this warning could result in injury or death.

WARNING: Consult your doctor if there is reason to doubt your fitness to safely absorb the shock from a fall arrest. Age and fitness seriously affect a worker's ability to withstand falls. Pregnant women or minors must not use Safewaze Ladder Climb Systems. Failure to heed this warning may result in serious injury or death.

14.2 AFTER A FALL

Employers must create and maintain a Fall Protection and Rescue Plan and provide the means to implement those plans. ANSI Z359.2 "Minimum Requirements for a Comprehensive Managed Fall Protection Program " specifies "The employer shall provide prompt rescue to all fallen authorized persons", with a recommended goal for rescuing the victim of less than 6 minutes. While there is no specific criteria for what constitutes a "prompt rescue", all workers must be trained on the site Rescue Plan and all equipment associated with the Rescue Plan.

Any equipment exposed to the force of a fall, or that shows damage consistent with the effects of a fall, must be removed from service immediately. Equipment must then be serviced (See Section 16) if applicable, or disposed of (See Section 17).

14.3 BODY SUPPORT

Only a full body harness equipped with a sternal (front) D-ring is suitable for use with the Safewaze Ladder Climb System.

14.4 SYSTEM CONNECTIONS

FIGURE 15 - 020-12101 CABLE SLEEVE

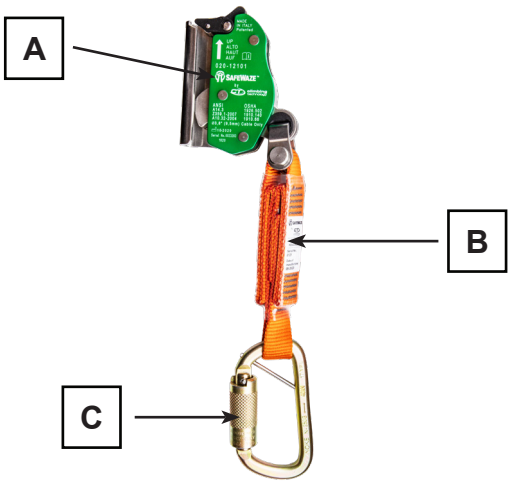

Product Weight: 1.4 lbs

AAF: 900 lbs. **MAF:** 1,800 lbs

Max User Capacity:
310 lbs to ANSI
420 lbs to OSHA

020-12101 Components	
A	Cable Sleeve
B	Energy Absorber
C	Steel Captive Eye Carabiner

020-12101 EVO Detachable Cable Sleeve:	**Part Number**	**Activation Force**	**Max Deployment Length**	**Minimum Breaking Strength**
	020-12101	450 lbf (2.0 kN)	36 in. (914.4 mm)	3,600 lbs (16kN)
Capacity:	Each user must have a combined weight (clothing, tools, etc.) of 88 lb. to 310 lb. (40 kg to 140 kg). The Safewaze Fixed Ladder Climb System may have up to 4 simultaneous users, but each 020-12101 EVO Detachable Cable Sleeve may have only one user attached. For additional users, additional Cable Sleeves must be used.			

WARNING: Prior to attachment of the 020-12101 to a vertical ladder cable assembly, the user must inspect all components of the entire Ladder Climb System. The user must ensure that the ladder is undamaged and safe for climbing operations, confirm that the vertical cable is undamaged and free from excessive corrosion, and inspect all other components of their Personal Fall Arrest System (PFAS).

1. Under guidance of a Competent Person, ensure that the 020-12101 is properly connected directly to the Sternal D-ring of the Full Body Harness via the captive eye carabiner (See Figure 16K). Never attach the captive eye carabiner to another carabiner for connection to the sternal D-ring (See Figure 16K). Prior to attaching the cable sleeve, ensure cable is steel or stainless steel and 3/8" diameter.

2. To attach the 020-12101 to the vertical cable, rotate the locking lever up so that lever clears the cable slot (See Figure 16A). Rotate the locking cam lever upwards at the same time to clear the locking cam from the cable slot (See Figure 16B).

3. With the locking lever and locking cam clear of the cable slot, place the 020-12101 onto the vertical cable so that the cable is seated in the cable slot (See Figure 16C).

4. Release the locking lever and locking cam lever to complete attachment to the vertical cable (See Figure 16D).

5. Once the 020-12101 is securely attached to both the user and the cable, climbing operations may begin.

6. The 020-12101 is designed to work with the Safewaze Ladder Climb System. During climbing, if the integral energy absorbing lanyard is slightly below the Cable Sleeve, the Cable Sleeve will remain stationary and in place (See Figure 16E).

7. With the integral lanyard at an upward angle relative to the sleeve, the 020-12101 will trail along the cable as the user ascends the ladder (See Figure 16F).

8. Prior to beginning any climbing operations, ensure that the 010-12101 is installed correctly onto the vertical cable lifeline. The cable sleeve has an arrow etched into the outer housing for the user's reference to ensure correct installation. Do not use or begin climbing if the 020-12101 is installed improperly (upside down) on the cable (See Figure 16G).

9. When ascending with the cable sleeve, the user must always maintain 3 points of contact with the fixed ladder assembly. The user should also climb in as straight an orientation as possible (See Figure 16H). The user should avoid leaning outward from the fixed ladder assembly when climbing, as this can place undue tension on the vertical cable and inhibit proper operation of the cable sleeve (See Figure 16H).

10. If the user finds it necessary to maintain a stationary position on the fixed ladder, a positioning type lanyard can be utilized if necessary (See Figure 16I). The user should never disengage or remove the cable sleeve during climbing for any reason. If the user stops climbing, they should never attempt to use the vertical cable and cable sleeve as a positioning device (See Figure 16I).

11. If the vertical ladder is of sufficient height to require cable guides, the user must know how to properly pass the guides during climbing operations. When the user reaches a point where the cable sleeve is just below the cable guide (See Figure 16J), they must pull the cable free from the cable guide (See Figure 16J). Once the cable is free of the guide, the user can slide the cable sleeve to a point above the cable guide (See Figure 16J). Once the cable sleeve has cleared the cable guide, simply push the cable back into the guide and continue climbing operations (See Figure 16J).

NOTE: USER MUST NEVER REMOVE THE CABLE SLEEVE FROM THE CABLE ASSEMBLY OR FROM THE STERNAL D-RING OF THE FULL BODY HARNESS AT ANY POINT WHILE CLIMBING THE FIXED LADDER CLIMB SYSTEM!

FIGURE 16 - CABLE SLEEVE INSTALLATION AND USE (020-12101)

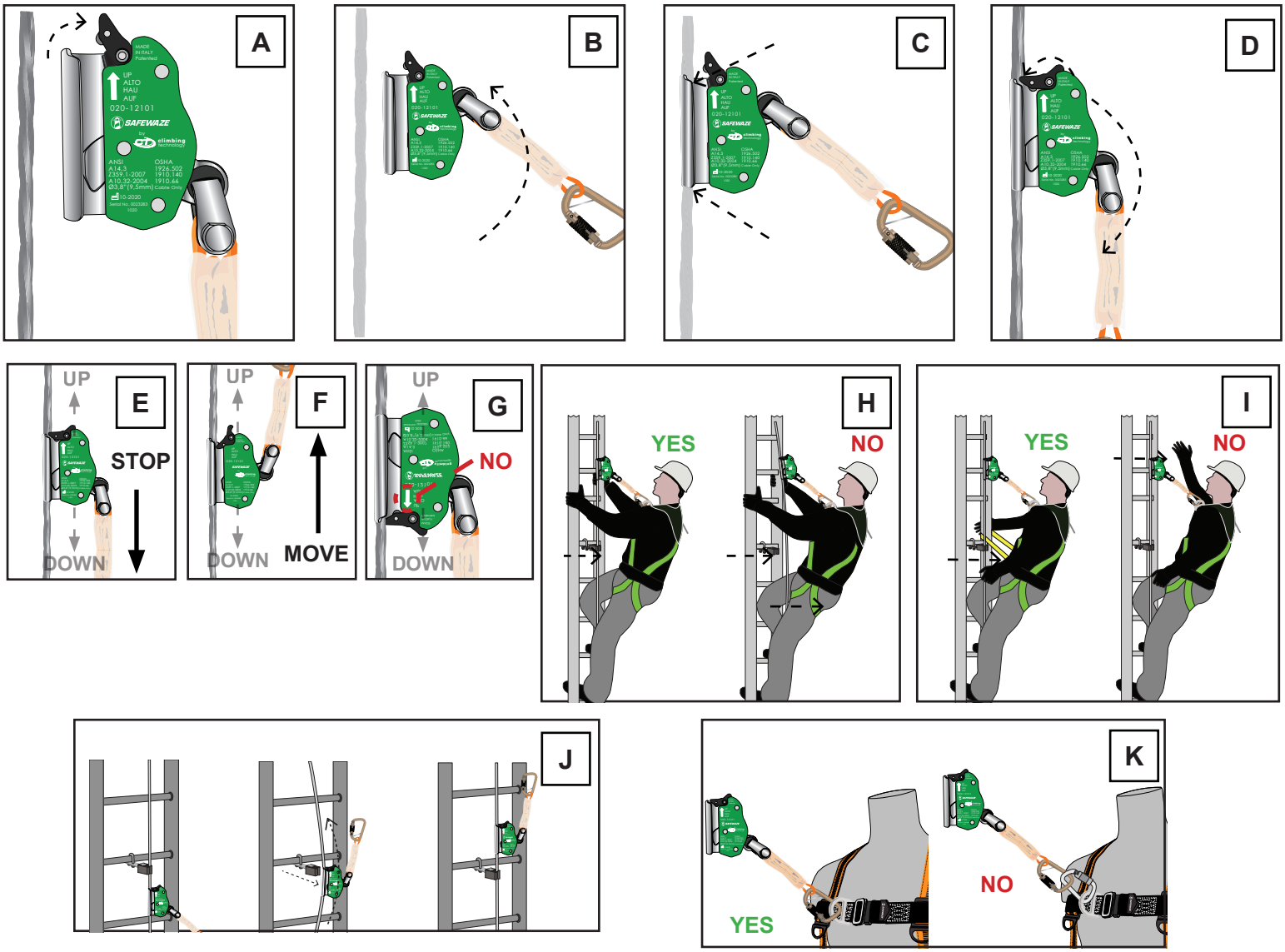

Figure 17 illustrates a typical Ladder Climb System connection when used as part of a complete Personal Fall Arrest System (PFAS). When using a snap hook to make a connection, ensure roll-out cannot occur (See Figure 4). Do not use snap hooks or carabiners that will not completely close over the anchor point.

FIGURE 17 - TYPICAL USE ILLUSTRATION

14.5 ANCHORAGE

Select an anchorage location with minimal free fall and swing fall hazards. Select a rigid anchorage point capable of sustaining static loads as defined in Section 5.

15.0 PERFORMANCE

Safewaze Ladder Climb Systems have been tested and certified to the performance requirements of the standard(s) identified on their ID labels. See Figure 19 for examples of product labeling.

16.0 MAINTENANCE, SERVICE, AND STORAGE

16.1 MAINTENANCE

Any Safewaze Ladder Climb System components requiring maintenance must be tagged “unusable” and removed from service. Cleaning maintenance may be performed by the user. If the cable assembly becomes heavily soiled with dirt, oil, grease, paint, etc., it may be cleaned with warm soapy water. Dry the assembly with a clean dry cloth after cleaning. Do not use forced air heat to dry. Do not use corrosive or caustic chemicals that could damage the cable assembly. Repairs to the product may only be made by the manufacturer or entities authorized in writing by the manufacturer.

WARNING: Avoid exposure of Safewaze Ladder Climb Systems to chemicals, high heat, severe cold, or other harsh environments which may produce a harmful effect. If in doubt, contact Safewaze (800) 230-0319.

16.2 SERVICE

Only Safewaze or entities authorized in writing by Safewaze, shall make repairs to this equipment. Remove the equipment from use if subjected to fall arrest forces. If unrepairable the system must be replaced. For questions regarding disposal, service, or repair of Safewaze Ladder Climb Systems, contact Safewaze at (800) 230-0319.

THIS SYSTEM MUST ONLY BE SERVICED BY A TRAINED AND COMPETENT INDIVIDUAL!
NEVER ATTEMPT TO SERVICE THIS UNIT OR TAMPER WITH ITS FUNCTION IN ANY WAY!

16.3 STORAGE

When not installed, the Safewaze Ladder Climb System should be stored in a cool, dry place out of direct sunlight. Do not store in areas where damage from environmental factors such as heat, light, excessive moisture, oil, chemicals and their vapors, or other degrading elements may be present. Do not store damaged equipment or equipment in need of maintenance in the same area as product approved for use. Equipment that has been stored for an extended period must be inspected as described in these User Instructions prior to use.

17.0 INSPECTION

17.1 PRIOR TO EACH USE

The Authorized Person must inspect this equipment prior to each use. Additional inspections by a Competent Person other than the user can vary in frequence dependent upon severity of use, and/or workplace conditions, but must be performed and documented at an annual frequence.

Inspection must include, but is not strictly limited to:

- Legibility of markings, tags, or labeling
- Absence of any components of system affecting form, fit or function
- Defects or damage to hardware elements including cracking, sharp edges, deformation, corrosion, chemical attack, excessive heating, alteration, and excessive wear.
- Alteration of any parts or evidence of defects in, damage to, or improper function of mechanical devices and connectors.
- Any condition that calls to question the suitability of the equipment for it's intended purpose.

See Figure 2 for key inspection points of the Safewaze Ladder Climb System

17.2 UNSAFE OR DEFECTIVE CONDITIONS

Figure 18 shows examples of potential damage to the cable component of the Ladder Climb System. Equipment inspectors must be trained to look for damage as illustrated in Figure 18, as well as other damage that may occur. If inspection reveals an unsafe or defective condition, remove the system from service.

FIGURE 18 - EXAMPLES OF EQUIPMENT DAMAGE

Kinked Wire Rope

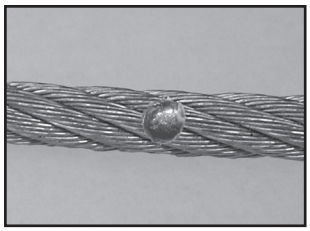

Welding Spatter

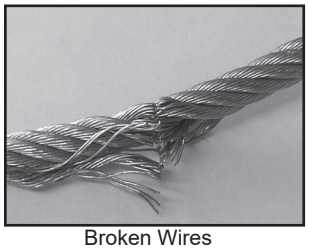

Broken Wires

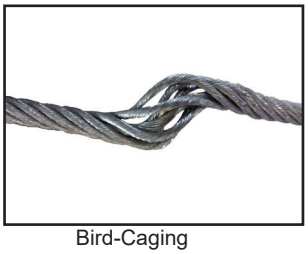

Bird-Caging

17.3 PRODUCT LIFE

The working life of Safewaze Ladder Climb Systems are determined by work conditions, care, maintenance, and proper inspections. As long as the system passes inspection, it may remain in service.

17.4 DISPOSAL

Dispose of the Safewaze Ladder Climb System if it has been damaged by fall arrest forces or inspection reveals an unsafe or defective condition that cannot be repaired by an authorized Safewaze Service Center. Before disposing of the system, cut the lifeline in half so that it is not mistakenly reused. For questions regarding disposal, service, or repair of Safewaze Ladder Climb Systems, contact Safewaze at (800) 230-0319.

18.0 LABELING

FIGURE 19 - LABELING

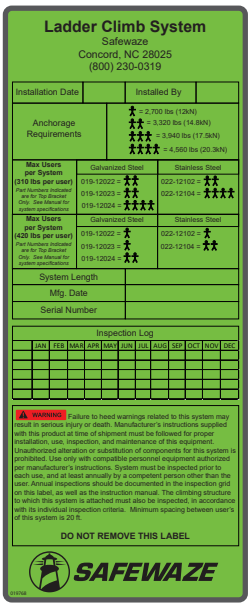

Ladder Climb System
Safewaze
Concord, NC 28025
(800) 230-0319

Installation Date		Installed By	
Anchorage Requirements	= 2,700 lbs (12kN) = 3,320 lbs (14.8kN) = 3,940 lbs (17.5kN) = 4,560 lbs (20.3kN)		

Max Users per System (310 lbs per user) Part Numbers Indicated are for Top Bracket Only. See Manual for system specifications	Galvanized Steel	Stainless Steel
	019-12022 = 019-12023 = 019-12024 =	022-12102 = 022-12104 =

Max Users per System (420 lbs per user) Part Numbers Indicated are for Top Bracket Only. See Manual for system specifications	Galvanized Steel	Stainless Steel
	019-12022 = 019-12023 = 019-12024 =	022-12102 = 022-12104 =

System Length	
Mfg. Date	
Serial Number	

Inspection Log

	JAN	FEB	MAR	APR	MAY	JUN	JUL	AUG	SEP	OCT	NOV	DEC

WARNING Failure to heed warnings related to this system may result in serious injury or death. Manufacturer's instructions supplied with this product at time of shipment must be followed for proper installation, use, inspection, and maintenance of this equipment. Unauthorized alteration or substitution of components for this system is prohibited. Use only with compatible personnel equipment authorized per manufacturer's instructions. System must be inspected prior to each use, and at least annually by a competent person other than the user. Annual inspections should be documented in the inspection grid on this label, as well as the instruction manual. The climbing structure to which this system is attached must also be inspected, in accordance with its individual inspection criteria. Minimum spacing between user's of this system is 20 ft.

DO NOT REMOVE THIS LABEL

SAFEWAZE

INSPECTION LOG

SAFEWAZE

INSPECTION LOG
ANNUAL FORM

Inspection Date:	Inspector:	Pass/Fail:	Comments/ Corrective Action:

SAFEWAZE

Safewaze
225 Wilshire Ave SW
Concord, NC 28025

PHONE: 1-800-230-0319
FAX: 1-704-262-9051

WEB: Safewaze.com
EMAIL: info@Safewaze.com

V3.0 2023 Copyright Safewaze